FA BGS series

M18 direct diffuse with adjustable background suppression

features

- up 300 mm adjustable reading distance
- Cable or M12 plastic plug versions
- Supply voltage 10...30 Vdc, output current 100 mA
- LED light status indicator
- IP67 protection degree
- Complete protection against electrical damages
- ATEX models, cat.3, available on request
- Approvals: CE and cULus Listed

web contents

- Application notes
- Photos
- Catalogue / Manuals

code description(*)

FAR S / B P - 0 A

series	FAR	M18 photoelectric sensor with adjustable 30...130 mm
adjustment	S	Adjustment 30...130 mm
	W	Adjustment 35...300 mm
	B	Complementary output
output	P	PNP output
	N	NPN output
housing	0	Plastic housing axial optic
	1	Metal housing axial optic
cable/ plug	A	Axial cable output 2 m
	E	Axial M12 plastic plug output

(*) ATEX models available, contact our Sales Dept. for further information.

available models

function	distance	housing	4 wires NO + NC PNP		4 wires NO + NC NPN	
			cable	plug	cable	plug
background suppression	30...130 mm	axial plastic	FARS/BP-0A	FARS/BP-0E	FARS/BN-0A	FARS/BN-0E
		axial metallic	FARS/BP-1A	FARS/BP-1E	FARS/BN-1A	FARS/BN-1E
	60...100	metallic	-	FARS/BP-1E7712	-	FARS/BN-1E7712
	35...300 mm	axial plastic	FARW/BP-0A	FARW/BP-0E	FARW/BN-0A	FARW/BN-0E
		axial metallic	FARW/BP-1A	FARW/BP-1E	FARW/BN-1A	FARW/BN-1E

technical specification

background suppression

	FARS/**-**	FARW/**-**
nominal sensing distance	30...130 mm	35...300 mm
scanning adjustable range Sd	30...130 mm (white paper)	35...300 mm (white paper)
emission	red light (660 nm)	Pin Point red light (660 nm)
hysteresis	≤ 10 %	
repeatability	10 %	
operating voltage	10...30 Vcc	
ripple	≤ 10 %	
no-load supply current	25 mA	
load current	100 mA	
leakage current	≤ 10 µA (@ 30 Vcc)	
output voltage drop	2 V max. IL = 100 mA	
output type	NPN o PNP; NO + NC	
switching frequency	1 kHz	
power on delay	200 ms	
power supply protections	short circuit (auto reset)	
operating temperature range	- 25°C...+ 70°C (without freeze)	
temperature drift	≤ 10 % Sd (≤ 3 % Sd per Sd 60...110 mm)	
distance adjustment	potentiometer	
protection degree	IP67 (EN60529) [1]	
EMC	in conformity with the EMC Directive according to EN 60947-5-2	
external light interference	5,000 lux (incandescence lamp), 10,000 lux (sunlight)	
LEDs	yellow / light status / short circuit / internal error	
cable exit	PVC 4x0, 34 mmq; Ø 4,7 mm; 2m	
plug exit	M12 4 pins, male	
housing material	PBT (plastic) / nicked plated brass (metallic) / PC (cable exit and plug)	
optic material	plastic	
tightening torque	25 Nm (metallic)	
weight (approximate)	plastic version: 30 g connector / 50 g cable metallic version: 100 g connector / 130 g cable	
yellow LED status	sensor status	
ON	light status	
OFF	dark status	
flashing slowly	output short circuit detected	
flashing 3 of 10	internal error	

[1] Protection guaranteed only with plug cable well mounted

electrical diagrams of the connections

NPN	PNP
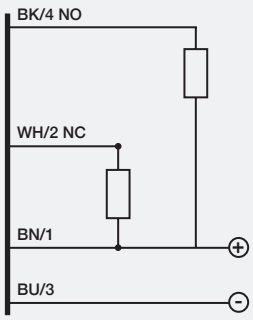	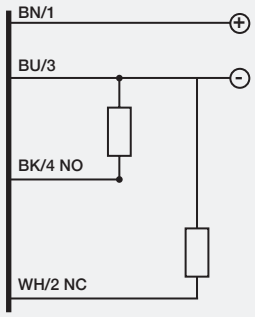

BN	brown
BU	blue
BK	black
WH	white
PK	pink
GY	gray

plug

M12 4 wires output complementary NO and NC

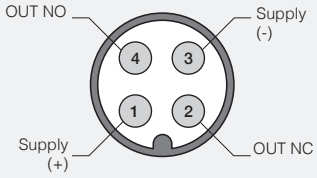

response diagram

FARS/-** spot dimension**

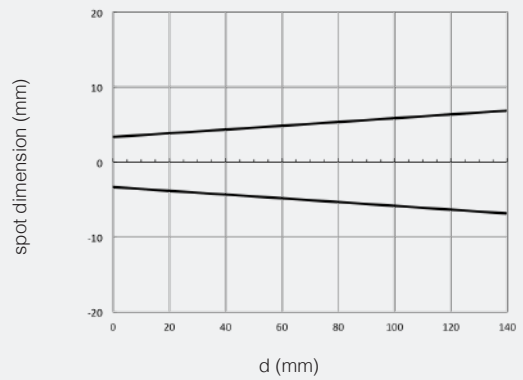

FARS/-** parallel displacement**

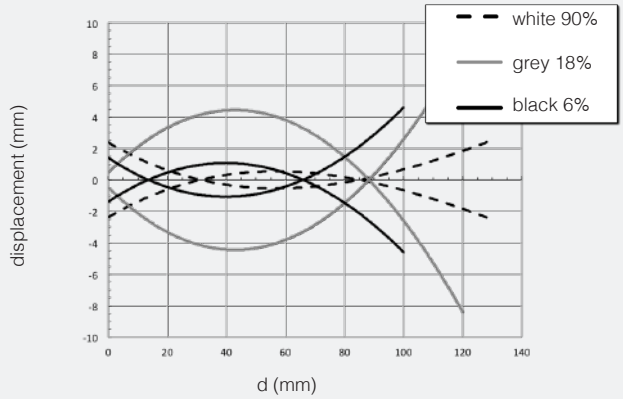

FARS/-** reduction of sensing distance**

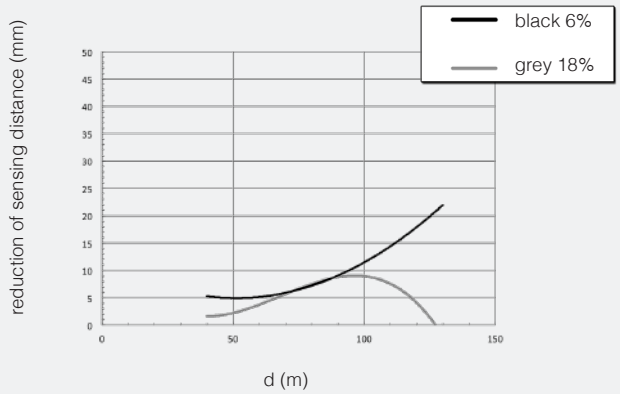

FARS/-** blind zone**

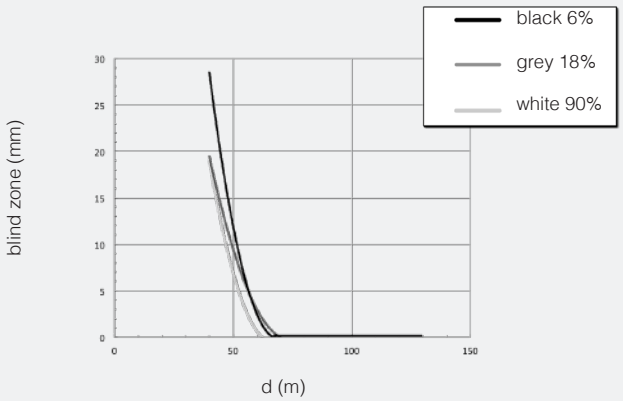

FARW/**-** spot dimension

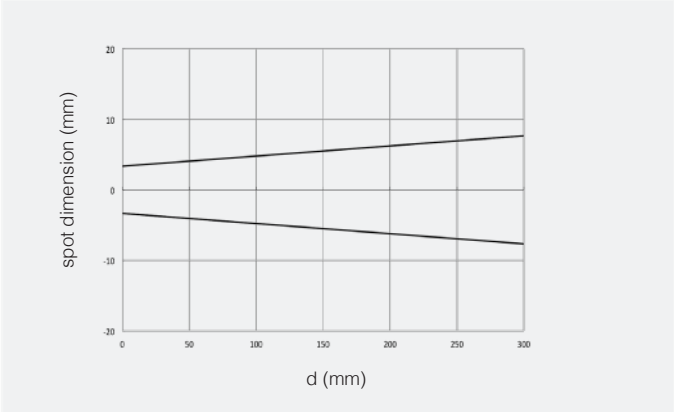

FARW/**-** parallel displacement

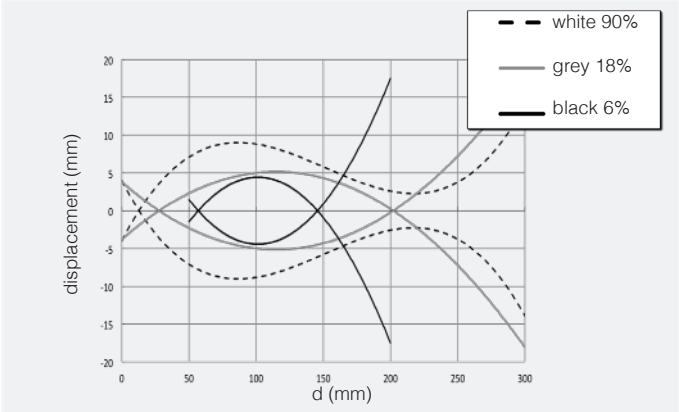

FARW/**-** reduction of sensing distance

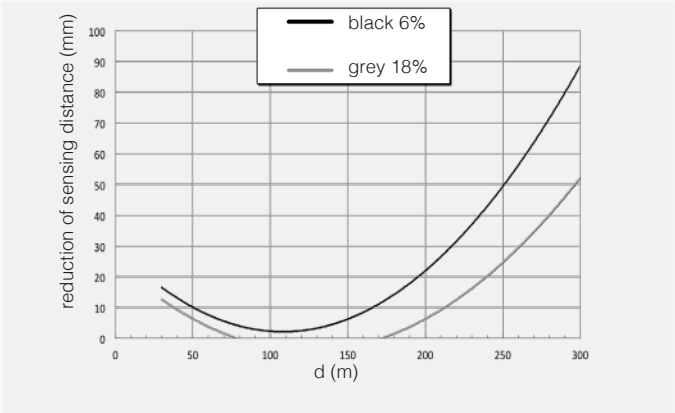

FARW/**-** blind zone

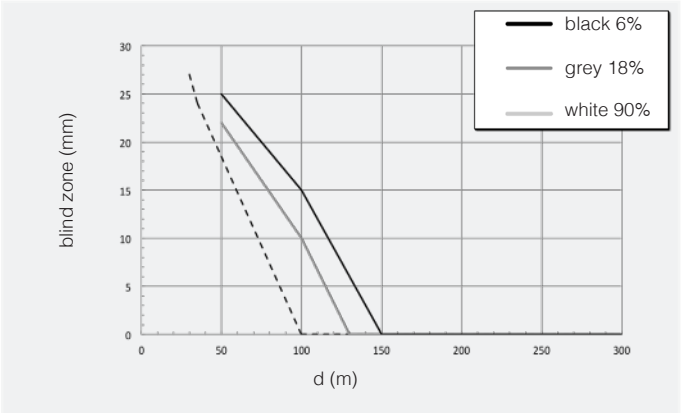

dimensions (mm)

FAR*/**-*A

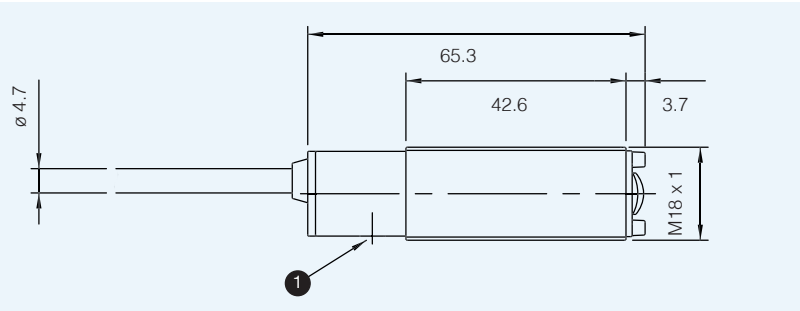

FAR*/**-*E

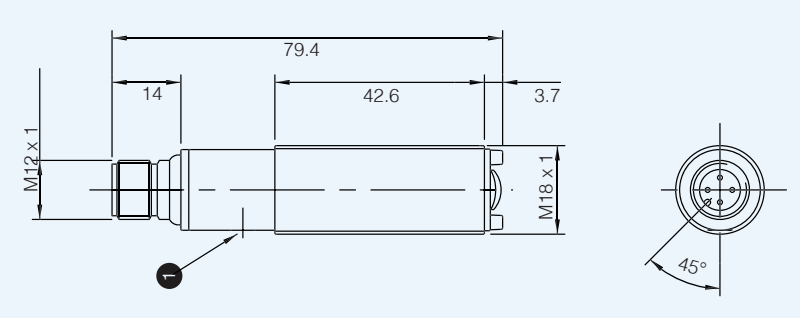

1 potentiometer for sensitivity adjustment

dimensions (mm)

accessories included in all plastic models

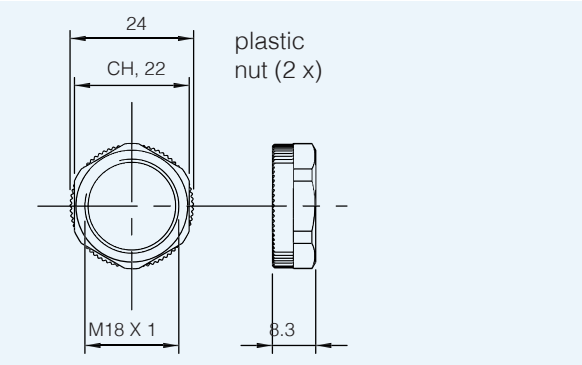

dimensions (mm)
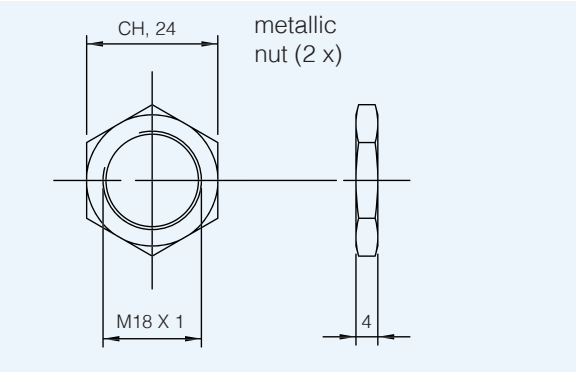
accessories included in all metallic models